How a wide range DUAL–SNAP® pressure switch works

1. The heart of the design...

2. Back up the disc spring with a fully adjustable helical spring.

3. Add a limp diaphragm, adjustment system and a switch.

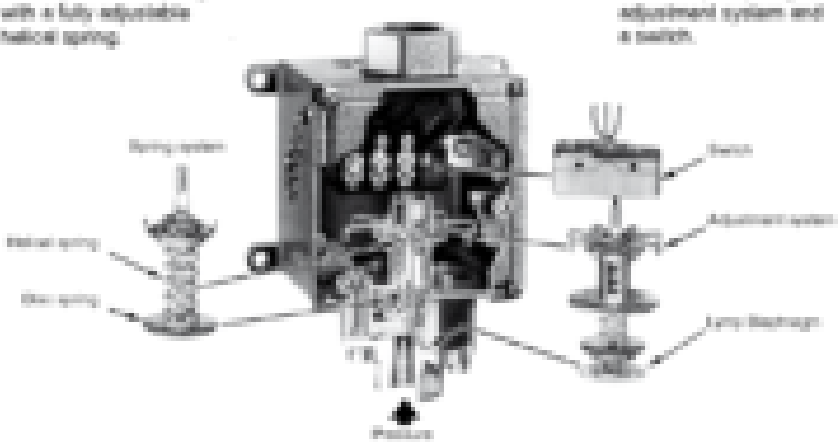

Bemastering the elastic creep deflection of conventional pressure switch sensors with the negative spring rate of a disc spring combination pressure switches have now become totally free complaints. This revolutionary design has been proven to be so reliable that on jet aircraft, for instance, it has been the only design acceptable for many decades.

The diaphragm is only sensing element. It senses the medium and transfers pressure to the disc spring, which responds instantaneously when system pressure reaches the set point.

4. Complete the system

with components suitable for specific pressures, fluids and environments...and you have a Wide Range DUAL –SNAP® Pressure Switch with these advantages:

- Set points stay set – not sensitive to shock, vibration, temperature variations, or other ambient conditions.
- No "hazing" of fluctuating pressures – no "hazing" of the electrical element. The switch is either "on" or "off."
- Minimizes the adverse effects of pump ripple, contam-ination, fatigue, premature wear, and other common switch problems.
- Maximum life expectancy with lifetime reliability and precise repeatability assured.
- A wide range of set points available in each switch model series.